OUTDOOR KITCHEN

ARTUSI
THE ART OF LIVING

Outdoor Kitchen

ABS SERIES

FREESTANDING OUTDOOR KITCHEN

CABINETRY MADE IN SOUTH AFRICA | 25 YEAR BENCHTOP WARRANTY | 5 YEAR STEEL WARRANTY | SYMMETRICAL DESIGN | 2 PERSON ASSEMBLY

ARTUSI. Outdoor Living

CABINETRY

CONSTRUCTION

- Steel frame: galvanised and powder coated to protect from corrosion
- Steel cabinet and rear panel: galvanised and vinyl wrapped in timber look
- Substrate: PVC board to reduce weight, act as fire insulator, does not attract humidity
- Cladding: 6mm Neolith stone finish, seamless, hard wearing, true to touch, scratch and stain resistant

DESIGN

- Assembly: designed to be assembled by two people in under one hour, tools supplied (spanner and allen key)
- Symmetrical design: the unit can be assembled left or right oriented, this means that the BBQ unit can sit on the left or right-hand side of the outdoor kitchen bench
- Dimensions assembled: 2353mmW x 680mmD x 950mmH
- Feet: height adjustable to compensate for uneven floors to +/-50mm
- Colour: benchtop: grey anthracite; timber look finish: dark oak
- Packaging: designed to transport as flat packed unit, in four packs, total weight of 160kg

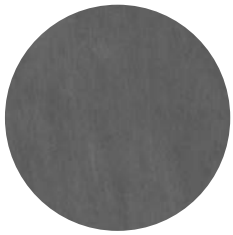

BENCHTOP

CABINETS

Outdoor Kitchen

ABS SERIES

ABBQPACK1: INCLUDED CABINETRY & APPLIANCES

CABINETRY MADE IN SOUTH AFRICA | 25 YEAR BENCHTOP WARRANTY | 5 YEAR STEEL WARRANTY | SYMMETRICAL DESIGN | 2 PERSON ASSEMBLY

CABINETRY

- ABS1 - Artusi Outdoor Kitchen
  (ABS2 available with no sink space)

STANDRAD APPLIANCE INCLUSIONS

- ABBQ1B - Artusi Built-in Gas BBQ
- ABFLAT - Artusi Built-in Gas BBQ Flat Lid ABBQPACK1
- ABHOOD - Artusi Built-in Gas BBQ Dome Lid - ABBQPACK2
- AGS411B - Artusi Granitek Stone Sink
- ASM101B - Artusi Mixer Tap
- ABC1B - Artusi Outdoor Bar Fridge

For more information on the included Artusi Appliances, visit artusi.com.au

CABINETRY

www.artusi.com.au

OTHER VARIATIONS AVAILABLE

ABBQPACK2

Included Cabinetry (ABS1) & Appliances as mentioned above with ABHOOD BBQ lid

ABBQPACK3

Included Cabinetry (ABS2 - no sink space) & Appliances with ABFLAT BBQ lid (no sink space & no sink or tap provided)

ABBQPACK4

Included Cabinetry (ABS2 - no sink space) & Appliances with ABHOOD BBQ lid (no sink space & no sink or tap provided)

Pictured: ABBQ1B built-in barbecue with ABHOOD dome lid

ABBQ1B

STANDARD INCLUSION
BUILT-IN GLOSS BLACK BBQ

MADE IN ITALY | 24 MONTH WARRANTY | 104CM | 4 GAS BURNERS | FLAME FAILURE DEVICE | INTEGRATED IGNITION

- Meticulous design with seamless finish
- finished in gloss black enamel
- Automatic Piezo battery ignition with concealed D cell battery compartment
- Interchangeable hotplate configuration for different cooking styles
- 2 x solid cast iron removable grill plates
- 1 x cast iron removable flat hotplate
- Anti-warp engineered hotplate
- Hotplate and grills include self locking notches
- Stainless steel burners with flame failure
- Total burner power output 14kW (European tested)
- 1 x removable grease container for oil and residue within the cooking area
- 1 x removable main catcher at the front of the grills with a drain system
- Side control knobs
- Oil/fat reservoir
- Available in natural gas or LPG pre-set

/ For technical diagrams please refer to artusi.com.au
/ Power Consumption: D Cell Battery
/ Gas Consumption: 52 mj/h (natural gas)
/ 5/8" connection fitting hose and regulator assembly included

AVAILABLE COMPANION PRODUCTS

ABHOOD

Roasting dome BBQ hood with thermostat

ABFLAT

Slimline flat lid

BBQCOVERH / BBQCOVERF

Canvas cover for ABHOOD
Canvas cover for ABFLAT

Pictured: ABBM built-in
barbecue with ABBQMH dome lid

ABBQM

OPTIONAL CHANGE
BUILT-IN STAINLESS STEEL BBQ

MADE IN ITALY | 24 MONTH WARRANTY | 104CM | 4 GAS BURNERS | FLAME FAILURE DEVICE | INTEGRATED IGNITION

- Meticulous design with seamless finish
- AS316 stainless steel (suitable for outdoor and ocean-front environments)
- Automatic Piezo battery ignition with concealed D cell battery compartment
- Painted black BBQ interior
- Interchangeable hotplate configuration for different cooking styles
- 2 x solid cast iron removable grill plates
- 1 x cast iron removable flat hotplate
- Anti-warp engineered hotplate
- Hotplate and grills include self locking notches
- Stainless steel burners with flame failure
- Total burner power output 14kW (European tested)
- 1 x removable grease container for oil and residue within the cooking area
- 1 x removable main catcher at the front of the grills with a drain system
- Side control knobs
- Oil/fat reservoir
- Available in natural gas or LPG pre-set

/ For technical diagrams please refer to artusi.com.au
/ Power Consumption: D Cell Battery
/ Gas Consumption: 52 mj/h (natural gas)
/ 5/8" connection fitting hose and regulator assembly included

AVAILABLE COMPANION PRODUCTS

ABBQMH

316 stainless steel hood lid

ABBQMF

316 stainless steel flat lid

BBQCOVERH / BBQCOVERF

Canvas cover for ABHOOD
Canvas cover for ABFLAT

ABC1B

STANDARD INCLUSION

AUSTRALIA'S COLDEST' OUTDOOR BAR BEVERAGE CENTRE

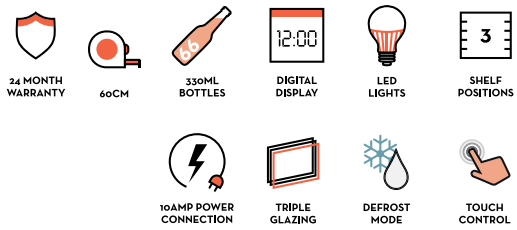

- Black glass door (triple glazed),
- Black body
- 100 litre internal capacity
- 330ml bottles: 66
- Shelves: 10 interchangeable half depth (5 levels)
- Freestanding or under-bench installation
- -5–10°C temperature range
- Climate type: T, 43°C ambient
- Ventilated cooling, auto defrost
- 3 retractable shelves
- Touch controls
- LED lighting
- Heated triple glazed glass door
- Brushed black handle moulded onto door frame
- Party mode- runs at -5°C & maintains the internal temperature for up to 6 hours
- Turbo mode- speeds up the cooling process (gives you 1 hour at -5°C)
- Door open alarm

/ For technical diagrams please refer to artusi.com.au 10amp power cord

AOF1S

OPTIONAL CHANGE
BACK BAR BEVERAGE CENTRE

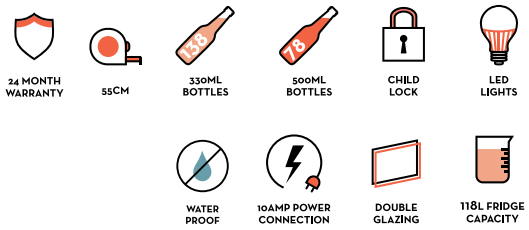

- Hammered aluminium interior
- Stainless steel door
- Black weatherproof exterior
- 118 litre internal capacity
- 330ml bottles: 138
- 500ml bottles: 78
- Shelves: 2 (3 levels)
- Freestanding or under-bench installation
- 0–10°C temperature range
- Climate type: up to 38°C ambient temperature
- Ventilated cooling
- Auto defrost
- Digital touch controls
- LED lighting
- Door lock
- Spring-loaded self-closing door
- Stainless steel door frame & bar handle
- Adjustable feet
- Withstands high humidity
- UV-safe stainless steel

/ For technical diagrams please refer to artusi.com.au 10amp power cord

AOF2S

AVAILABLE ADD ON PRODUCTS
BACK BAR BEVERAGE CENTRE

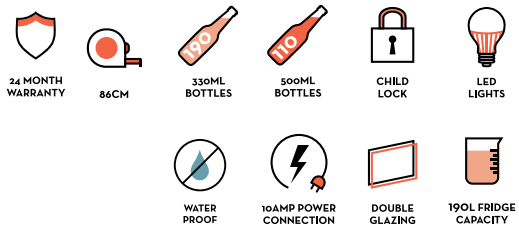

- Hammered aluminium interior
- Stainless steel doors
- Black weatherproof exterior
- 190 litre internal capacity
- 330ml bottles: 190
- 500ml bottles: 110
- Shelves: 4 (3 levels)
- Freestanding or under-bench installation
- 0–10°C temperature range
- Climate type: up to 38°C ambient temperature
- Ventilated cooling
- Auto defrost
- Digital touch controls
- LED lighting
- Door locks
- Spring-loaded self-closing door
- Stainless steel door frame & bar handle
- Adjustable feet
- Withstands high humidity
- UV-safe stainless steel

/ For technical diagrams please refer to artusi.com.au 10amp power cord

AOF2B ALSO AVAILABLE IN GLOSS BLACK

AOF3S

AVAILABLE ADD ON PRODUCTS
BACK BAR BEVERAGE CENTRE

- Hammered aluminium interior
- Stainless steel doors
- Black weatherproof exterior
- 307 litre internal capacity
- 330ml bottles: 304
- 500ml bottles: 247
- Shelves: 6 (3 levels)
- Freestanding or under-bench installation
- 0–10°C temperature range
- Climate type: up to 38°C ambient temperature
- Ventilated cooling
- Auto defrost
- Digital touch controls
- LED lighting
- Door locks
- Spring-loaded self-closing door
- Stainless steel door frame & bar handle
- Adjustable feet
- Withstands high humidity
- UV-safe stainless steel

/ For technical diagrams please refer to artusi.com.au 10amp power cord

Only available with ABBQPACK 1 & 2

AGS411B

STANDARD INCLUSION
SINGLE BOWL SINK

30 YEAR WARRANTY

MADE IN ITALY

FLUSHMOUNT

- Overall size (mm): 410 x 500
- Built-in hole size (mm): 390 x 480
- Bowl base size (mm): 450
- Bowl depth external (mm): 190
- Inset installation
- Anti-bacterial surface
- Waste is 58mm to mixer
- Designer waste plug

AVAILABLE ACCESSORIES

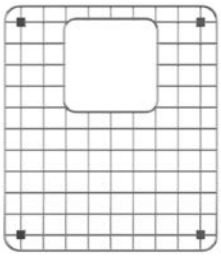

AGBO1305

Drain Rack

SINK KIT

Space saving siphon, waste and pre-mounted hooks, rectangular overflow

ASM101B OR ASM101X

STANDARD INCLUSION (BLACK)
GOOSENECK MIXER TAP

/ OPTIONAL change to Chrome
(subject to price alteration)

/ only available with ABBQPACK 1 & 2

- ASM101B: electroplated matt black finish or
- ASM101X: brushed nickel finish
- Single lever control
- Contemporary design
- Swivel spout
- Pin handle
- 6L per minute & 5 Star water rating
- Pperating temperature: 1°C - 70°C
- 35mm ceramic disk cartridge

ASM201B OR ASM201X

OPTIONAL CHANGE
GOOSENECK MIXER TAP WITH PULL OUT HOSE

/ OPTIONAL change to Chrome
(subject to price alteration)

- ASM201B: electroplated matt black finish or
- ASM201X: 304 stainless steel finish
- electroplated matt black finish
- pull out lever control
- water 'spray' function
- contemporary design
- swivel spout
- pin handle
- operating temperature: 1°C - 70°C
- 25mm ceramic disk cartridge
- 4.5 litres per minute
- 6 Star water rating

ACH12BBQ

AVAILABLE ADD ON PRODUCTS
20CM BARBECUE RANGE HOOD

24 MONTH WARRANTY | 120CM | LED LIGHTS | PUSH BUTTON | 10AMP POWER CONNECTION

- Full stainless steel construction
- Dual motors with 3 powerful air extraction speed
- 1000m³/hr airflow from each motors
- Two motors: 218W each
- Removable stainless steel baffle filters designed for maximum performance and easy cleaning
- 6 x LED lights will perfectly illuminate the cooking area wall mount installation
- twin duct outlets (one for each motor) provides maximum performance
- installation kit provided

/ For technical diagrams please refer to artusi.com.au

/ 170cm power cord length
/ 10 AMP plug & lead

/ Minimise grease and smoke when cooking on your barbecue with the Artusi twin-motor range hood. Twin turbo motors combined with a custom-designed ventilation system. Suitable for any size barbecue (up to 120cm wide).

ACH12BBQB

AVAILABLE ADD ON PRODUCTS
120CM BARBECUE RANGE HOOD

24 MONTH WARRANTY | 120CM | LED LIGHTS | TOUCH CONTROL | 10AMP POWER CONNECTION

- 304 Stainless steel with black glass facia
- 2000 m3/h air flow
- Twin 198W full sealed copper motors
- 200mm air outlet diameter
- 3 extraction speeds
- LCD display
- Touch control operation
- 6 x LED cooking lights will perfectly illuminate the cooking area
- AS304 stainless steel baffle filters
- 72 db/A noise level
- Wall mount installation
- Flue height 2 pieces (500mm each)

/ For technical diagrams please refer to artusi.com.au

/ 170cm power cord length
/ 10 AMP plug & lead

/ Minimise grease and smoke when cooking on your barbecue with the Artusi twin-motor range hood. Twin turbo motors combined with a custom-designed ventilation system. Suitable for any size barbecue (up to 120cm wide).

ABS1 OUTDOOR KITCHEN
TECHNICAL DIAGRAM

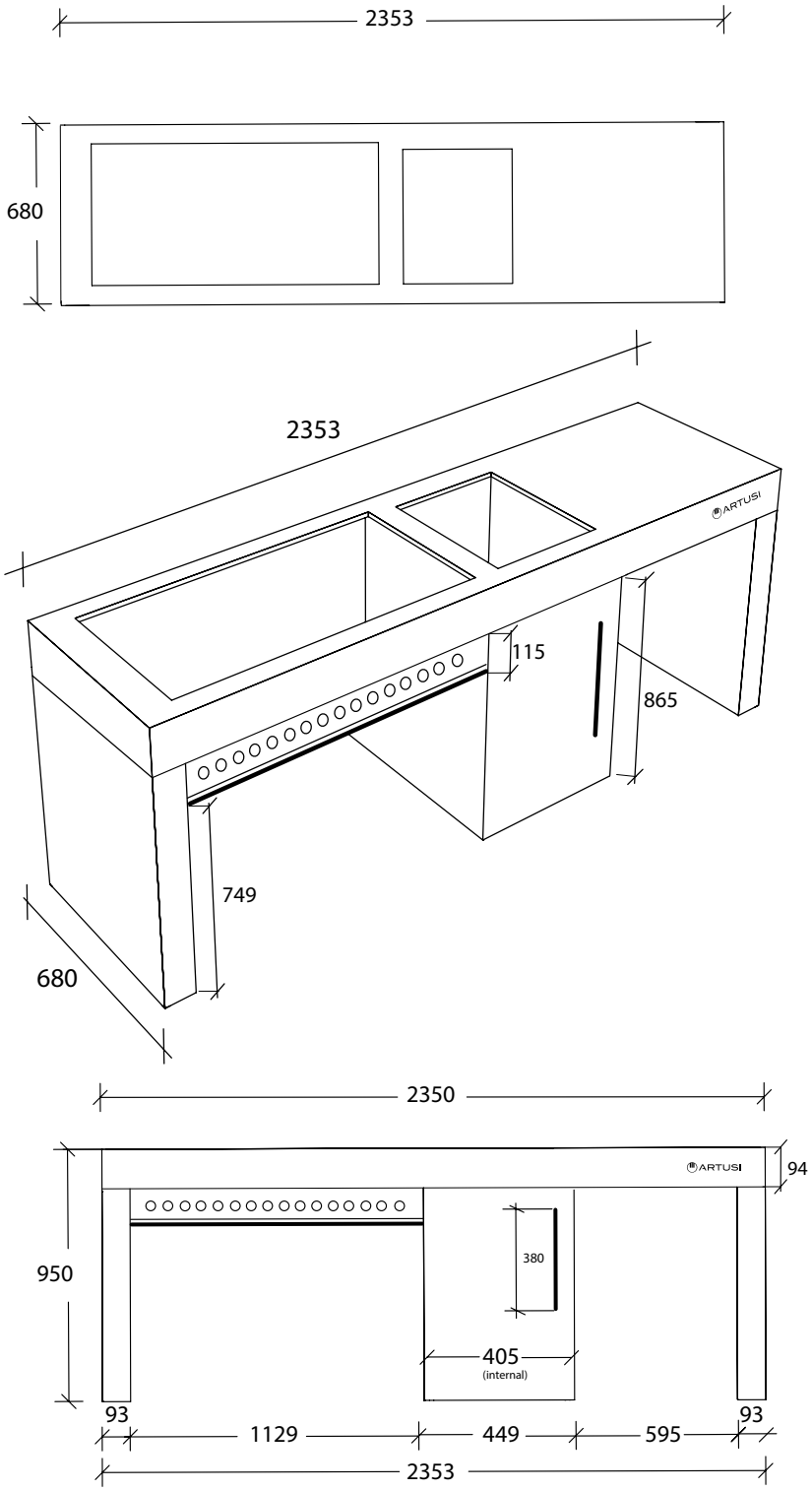

* includes adjustable feet upto 10mm

ABS2 OUTDOOR KITCHEN
TECHNICAL DIAGRAM

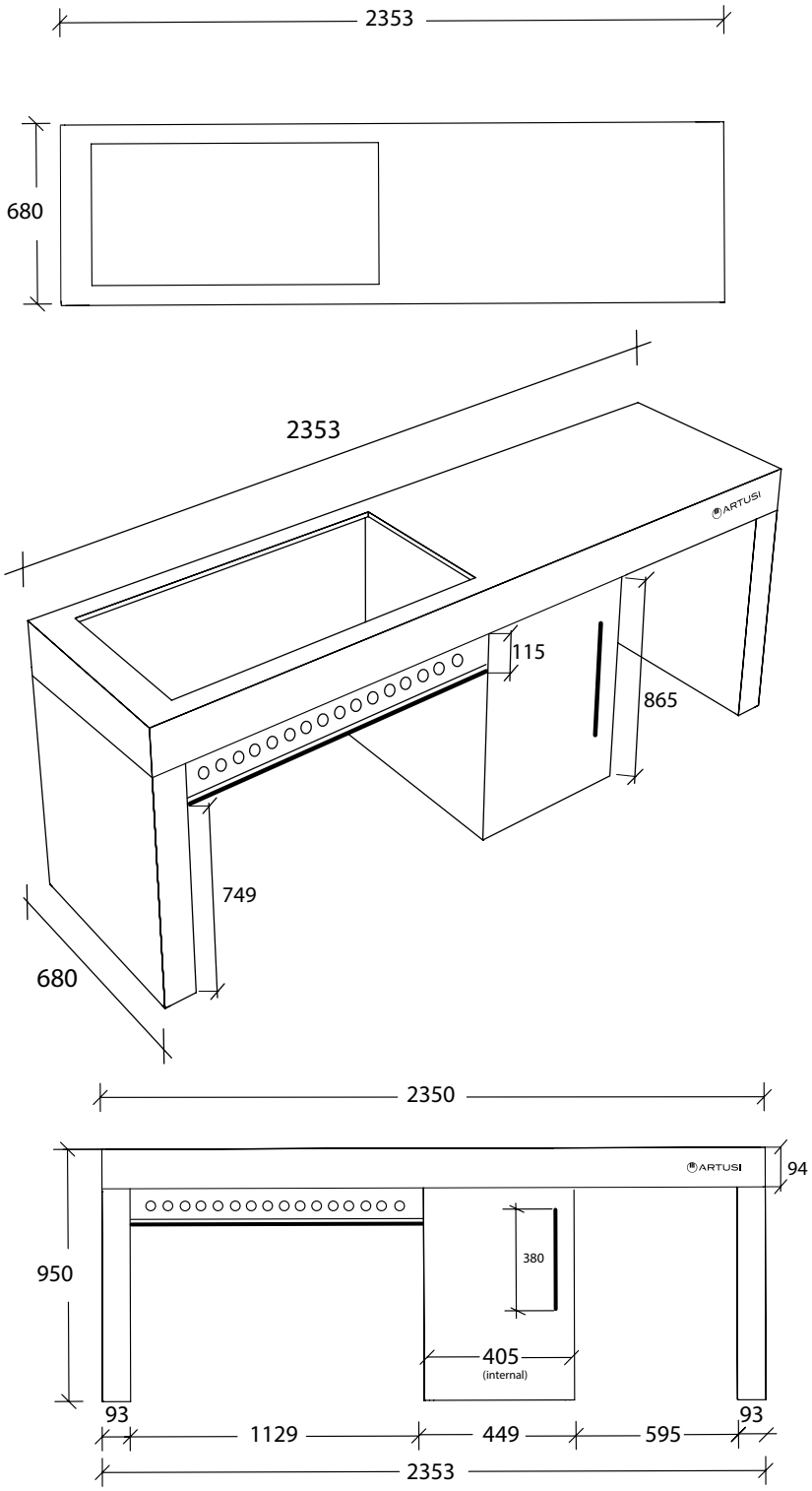

* includes adjustable feet upto 10mm

ARTUSI
THE ART OF LIVING

FOLLOW US ON: instagram.com/artusi_appliances www.linkedin.com/company/eurolinx-pty-ltd-t-a-ilve/

Australia National Telephone Number 1300 (694 583) **New Zealand Telephone Number 64 3 344 5913**
Artusi showroom hours: Tuesday to Friday - 9am-5pm, Saturday - 10am-4pm, Sunday and Monday - closed
*** Melbourne showroom hours:** Tuesday to Saturday - 10am-4pm

artusi.com.au

NSW & ACT (Head Office)
48-50 Moore Street
Leichhardt
F 02 8569 4699

QLD
1/42 Cavendish Road
Coorparoo
F 07 3397 0850

WA & NT
Unit 10/55 Howe Street
Osborne Park
F 08 9201 9188

New Zealand
PO Box 11.160
Sockburn Christchurch
F 03 344 5906